ABS □□ □ RFID □□ □□:

RFID □□□□ □□□ □□□, □□□, □□□□ □□ □□□ □□□□ □ □□ □□□ □□□□. □□□ ABS □□□□ □□ □□□□ □□□□. □□□ □□ □□□ □□□□ □□□□. □□□ □□, □□□□ □□, □□ □□ □□ □□□□□ □□□□□.

ABS □□ □ RFID □□ □□:

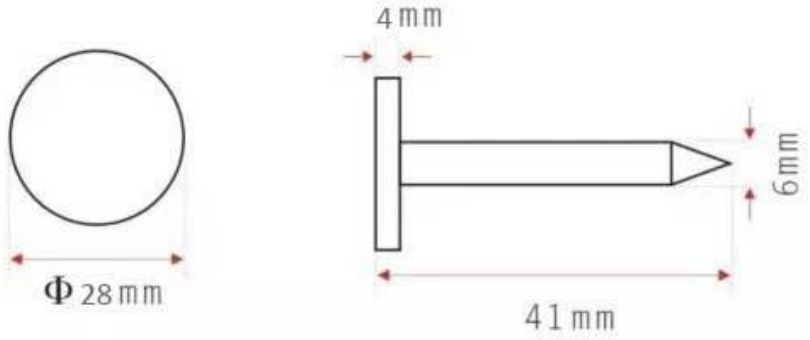

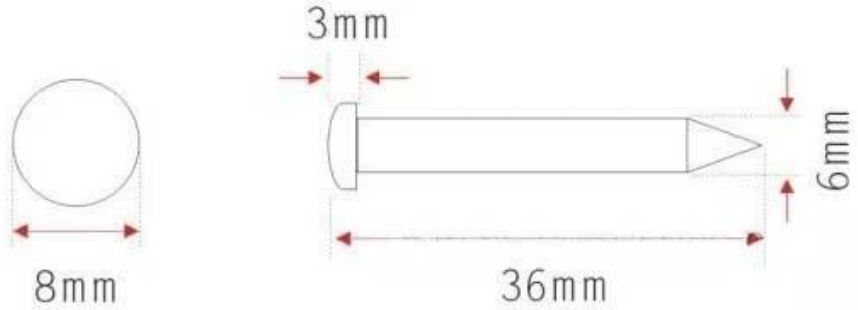

□□:	RFID □□ □□ □□
□□:	□□ ABS □□ □□ □□□
□□:	36*6mm, 40*10mm, 41*28mm(□□□ □□ □□)
□□:	125KHz, 134.2KHz, 13.56MHz, 860-960MHz
□:	LF: EM4200, TK4100, T5577, HiTag1, HiTag2; HF: FMIIRF08, MIFAREL S50, MIFAREL S70, □□□, NTAG213, I-CODE 2, TI2048, SRI512; UHF: UCODE GEN2, ALIEN H3, IMPINJ □□ 4QT
□□ □□:	LF/HF: 1-3cm; UHF: 50-60 cm(□□ □□ □□□ □□□ □□□□ □ □ □□□ □ □□ □□□□ □□□ □□ □□)
□□:	1.25g
□□ □□:	-40℃~85℃
□□ □□:	-55℃~100℃

□□:	□□□ □
□□:	□□□
□□:	□□ □□□ □□□ □□ □□, □□ □□, □□ □□, □□ □□, □□ □□, □□ □□, □□ □□ □ □□ □□ □□ □□ □□□ □ □□ □□□□□. □□□ □□, □□□□ □□, □□ □□ □□ □□
□□ □□ □□:	500□
□□:	□□□□ □□ □□ □□□ □□□ □ □□□□.
□□:	100□/□□, 1000□/□□
□□:	□ 7□
□□□:	□□□

ABS □□ □ RFID □□ □□ □□□□:

ABS □□ □ RFID □□ □□ □□ □□:

RFID nail tag Package
Rfid nail tag
100pcs per box
1000pcs per carton
Outer carton package

□□ □□□ □□

Company Introduction

Office

3,000 m² office, 250+ professional sales service you!

Shenzhen Great Creativity Smart Card Co.,Ltd.

Factory

12,000m² clean work shop, more than 500 staffs, strict QC system, full set of advanced machines for all kinds of crafts production, ensuring each order will be taken cared fast and well.